A. Defination :

Design and implementation of a combinational circuit that converes the given BCD Number into an equivalent 2421 number

Truth table :

	BCD				2421			
	A	B	C	D	W	X	Y	Z
0	0	0	0	0	0	0	0	0
1	0	0	0	1	0	0	0	1
2	0	0	1	0	0	0	1	0
3	0	0	1	1	0	0	1	1
4	0	1	0	0	0	1	0	0
5	0	1	0	1	1	0	1	1
6	0	1	1	0	1	1	0	0
7	0	1	1	1	1	1	0	1
8	1	0	0	0	1	1	1	0
9	1	0	0	1	1	1	1	1

Don't care = d (10, 11, 12, 13, 14, 15)

K- map :

W =	C'D'	C'D	CD	CD'
A'B'	0	0	0	0
A'B	0	1	1	1
AB	x	x	x	x
AB'	1	1	x	x

$w = BD + BC + A \Rightarrow B(C+D) + A$

$x =$

0	0	0	0
1	0	1	1
x	x	x	x
1	1	x	x

$x = BD' + BC + A$

$y =$

0	0	1	1
0	1	0	0
x	x	x	x
1	1	x	x

$y = B'C + A + BC'D$

$z =$

0	1	1	0
0	1	1	0
x	x	x	x
0	1	x	x

$z = D$

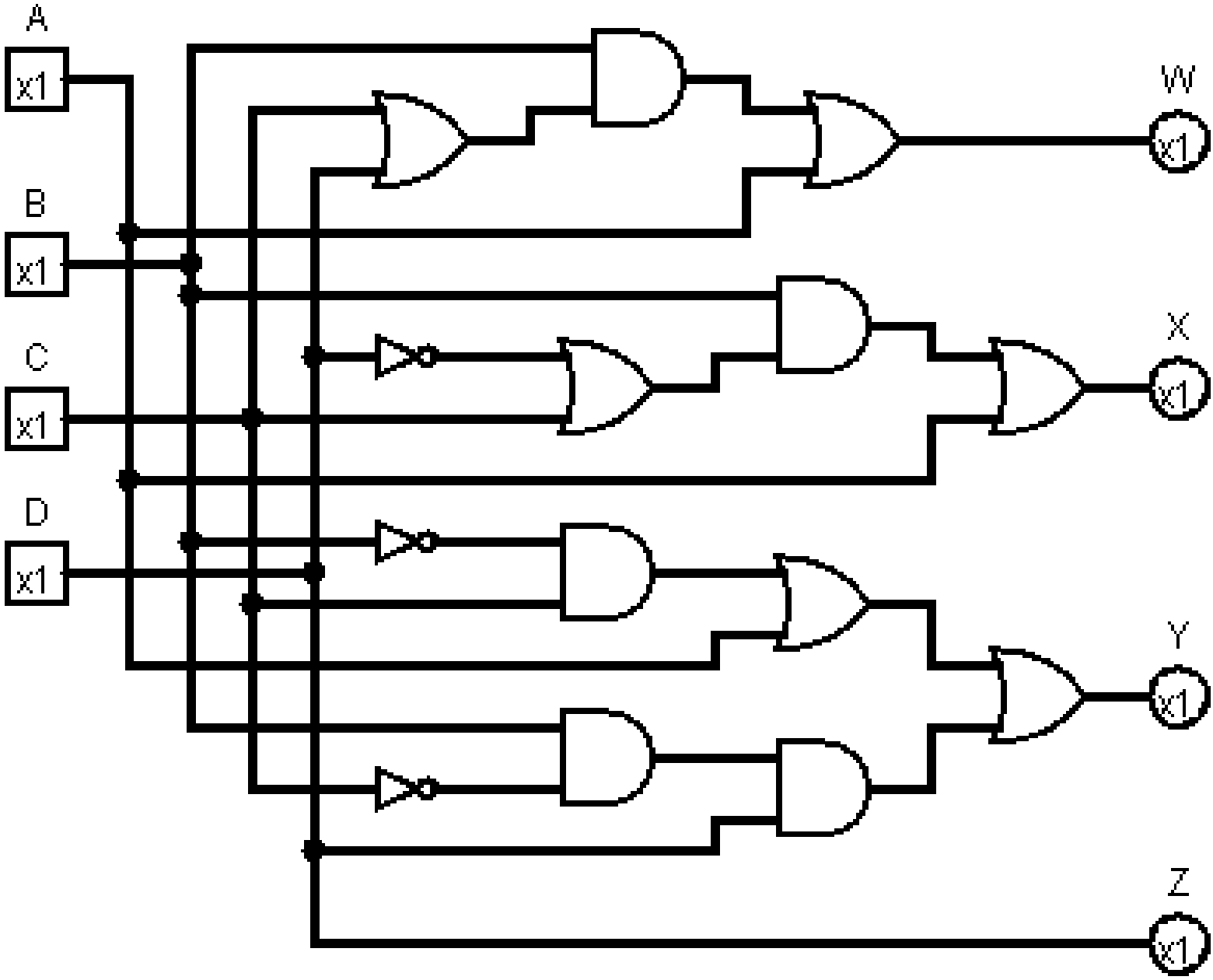
A
x1
B
x1
C
x1
D
x1
W
x1
X
x1
Y
x1
Z
x1

B. Defination:

Design and implementation of a combinational circuit that converts a decimal digit from the 8421-2-1 to 5421 code

Truth Table:

	8 4 -2 -1					5421			
	A	B	C	D	Kmap	w	x	y	z
0	0	0	0	0	0	0	0	0	0
1	0	1	1	1	7	0	0	0	1
2	0	1	1	0	6	0	0	1	0
3	0	1	0	1	5	0	0	1	1
4	0	1	0	0	4	0	1	0	0
5	1	0	1	1	11	0	1	0	1
6	1	0	1	0	10	0	1	1	0
7	1	0	0	1	9	0	1	1	1
8	1	0	0	0	8	1	0	1	1
9	1	1	1	1	15	1	1	0	0

Don't care = d (1, 2, 3, 12, 13, 14)

Kmap:

w =	$C'D'$	$C'D$	CD	CD'
$A'B'$	0	x	x	x
$A'B$	0	0	0	0
AB	x	x	1	x
AB'	1	0	0	0

$$w = AC'D' + AB$$

x =				
	0	x	x	x
	1	0	0	0
	x	x	1	x
	0	1	1	1

$$x = BC'D' + AD + AC$$

y =				
	0	x	x	x
	0	1	0	1
	x	x	0	x
	1	1	0	1

$$y = C'D + CD' + AC'$$

z =				
	0	x	x	x
	0	1	1	0
	x	x	0	x
	1	1	1	0

$$z = AC' + B'D + A'D$$

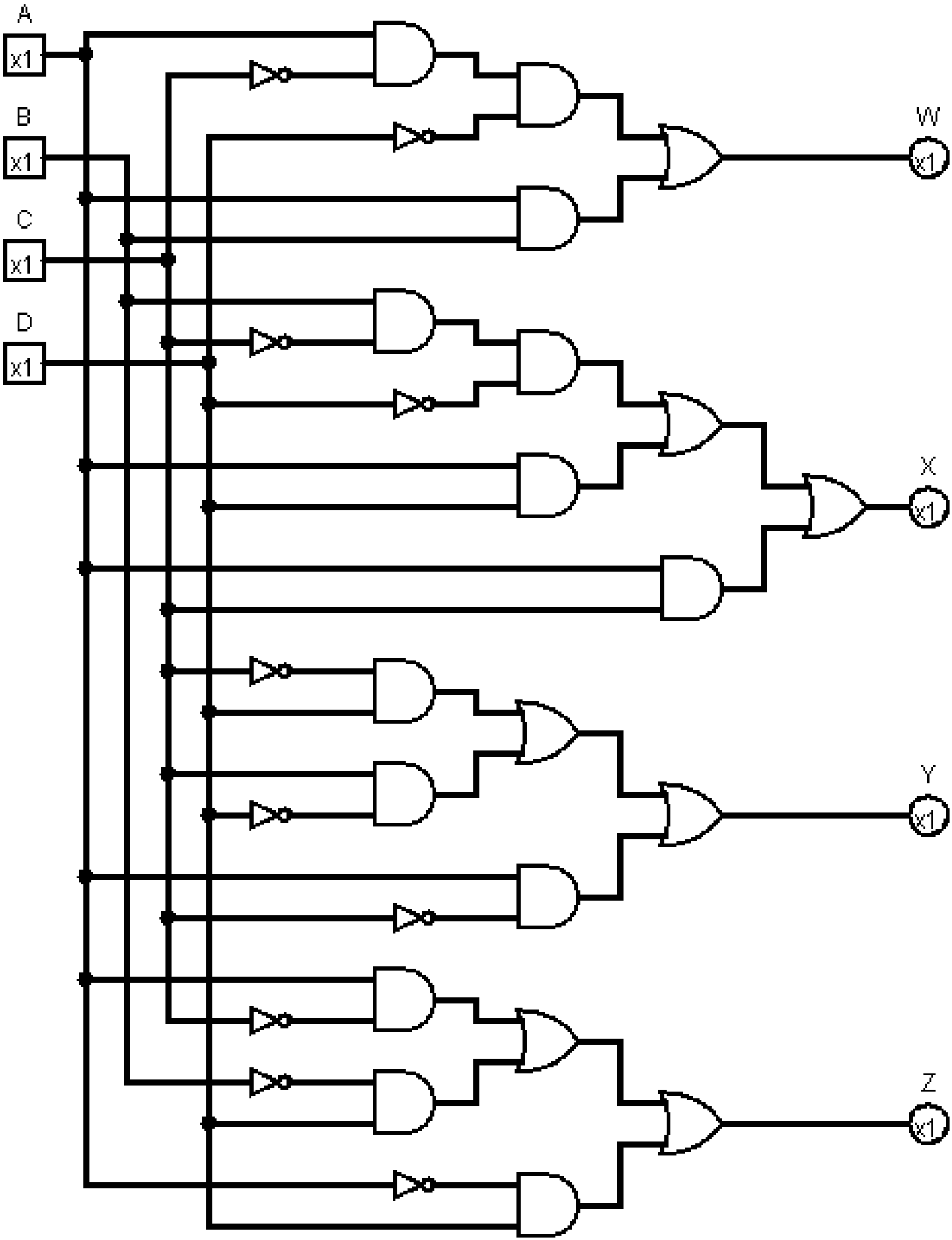
A
x1
B
x1
C
x1
D
x1
W
x1
X
x1
Y
x1
Z
x1

Practical - 3

C. Defination:

Design and implementation of a combinational circuit that generates the square of a given 3 bit number

Truth table:

	x	y	z	A	B	C	D	E	f
0	0	0	0	0	0	0	0	0	0
1	0	0	1	0	0	0	0	0	1
2	0	1	0	0	0	0	1	0	0
3	0	1	1	0	0	1	0	0	1
4	1	0	0	0	1	0	0	0	0
5	1	0	1	0	1	1	0	0	1
6	1	1	0	1	0	0	1	0	0
7	1	1	1	1	1	0	0	0	1

KMF:

	x \ yz	y'z' 00	y'z 01	yz 11	yz' 10
A :	x' 00	m_0	m_1	m_3	m_2
	x 01	m_4	m_5	m_7	m_6

0	0	0	0
0	0	1	1

A = xy

		$x'z'$	$y'z$	yz	$z'y$
B :	x'	0	0	0	0
	x	1	1	1	0

$B = xy' + xz = x(y'+z)$

		$y'z'$	$y'z$	yz	$z'y$
C :	x'	0	0	1	0
	x	0	1	0	0

$C = x'yz + xy'z = z(x \oplus y)$

		$y'z'$	$y'z$	yz	$z'y$
D :	x'	0	0	0	1
	x	0	0	0	1

$D = yz'$

$E = 0$

		$y'z'$	$y'z$	yz	yz'
f :	x'	0	1	1	0
	x	0	1	1	0

$f = z$

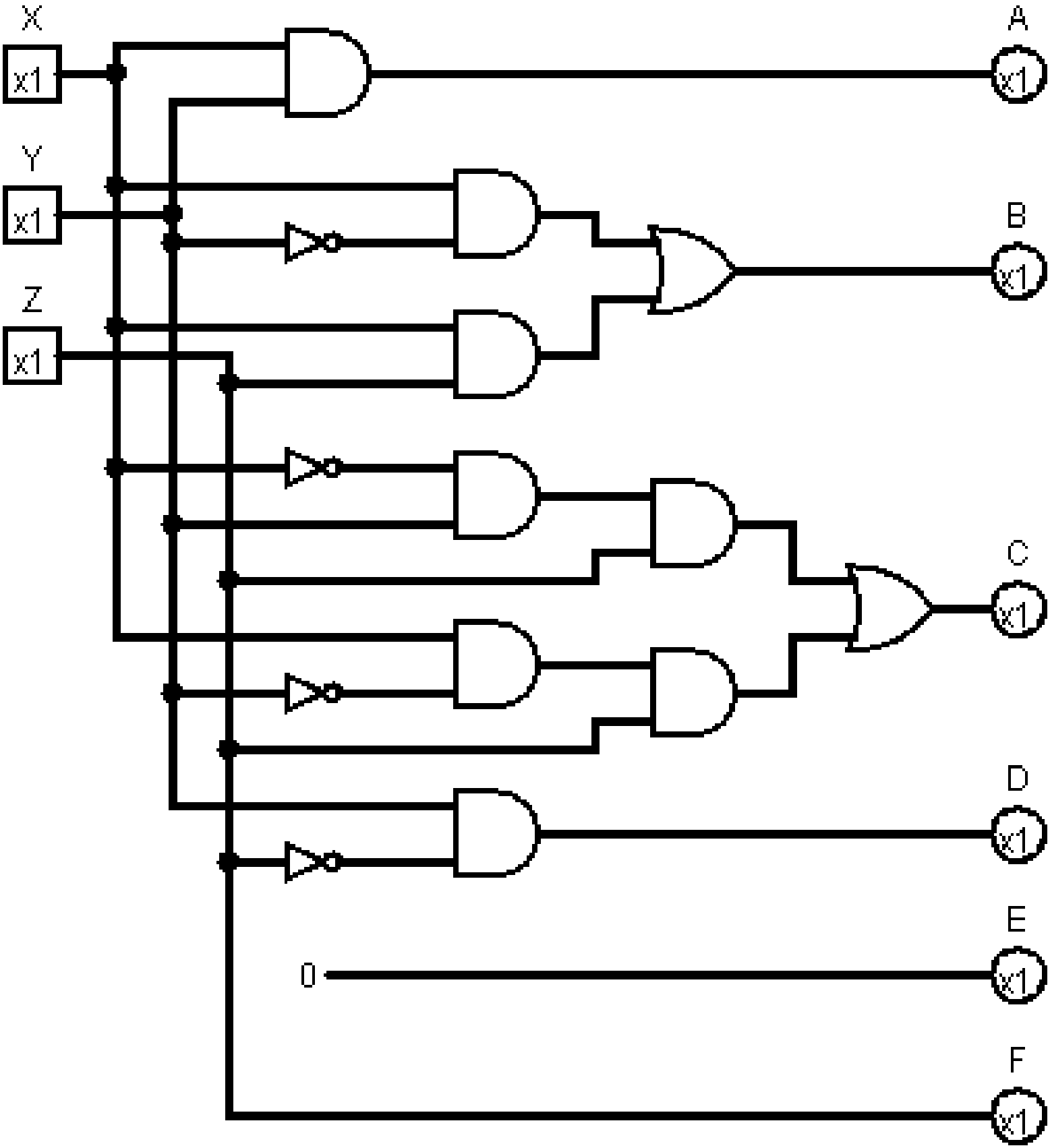
X
x1
Y
x1
Z
x1
A
x1
B
x1
C
x1
D
x1
E
x1
0
F
x1

D. Defination

Design a 4 bit parity generator and checker for your name

Truth Table: (odd parity)

	8	4	2	1		
	A	B	C	D	Parity	checker
0	0	0	0	0	1	0
1	0	0	0	1	0	0
2	0	0	1	0	0	0
3	0	0	1	1	1	0
4	0	1	0	0	0	0
5	0	1	0	1	1	0
6	0	1	1	0	1	0
7	0	1	1	1	0	0
8	1	0	0	0	0	0
9	1	0	0	1	1	0
10	1	0	1	0	1	0
11	1	0	1	1	0	0
12	1	1	0	0	1	0
13	1	1	0	1	0	0
14	1	1	1	0	0	0
15	1	1	1	1	1	0

K map

parity

	$C'D'$	$C'D$	CD	CD'
$A'B'$	1	0	1	0
$A'B$	0	1	0	1
AB	1	0	1	0
AB'	0	1	0	1

Parity (P) = $(A \oplus B \oplus C \oplus D)'$

checker

		000	001	011	010	110	111	101	100
		$C'D'E'$	$C'D'E$	$C'DE$	$C'DE'$	CDE'	CDE	$CD'E$	$CD'E'$
00	$A'B'$	1	0	1	0	1	0	1	0
01	$A'B$	0	1	0	1	0	1	0	1
11	AB	1	0	1	0	1	0	1	0
10	AB'	0	1	0	1	0	1	0	1

checker (C) = $(A \oplus B \oplus C \oplus D \oplus P)'$

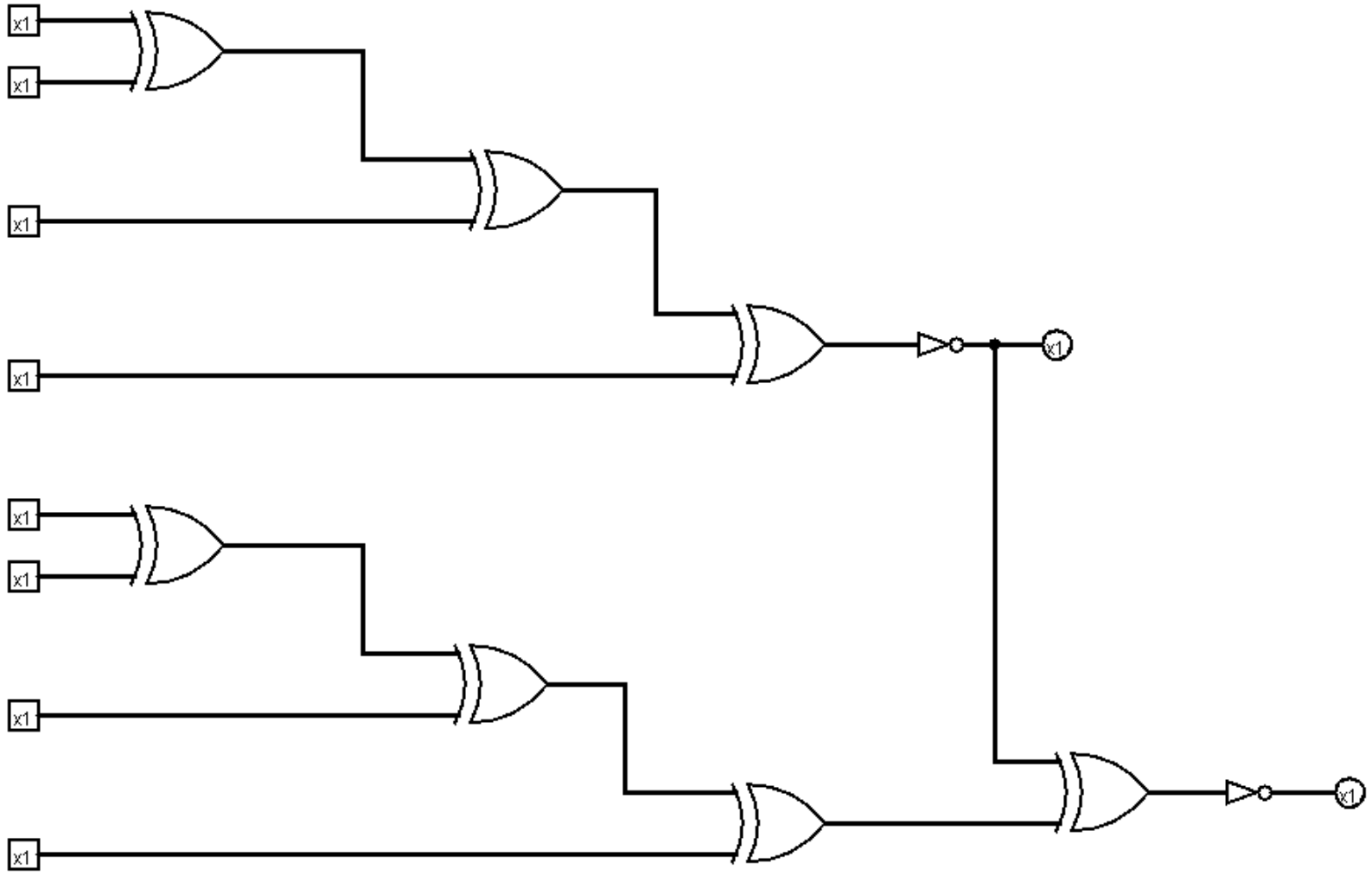
x1
x1
x1
x1
x1
x1
x1
x1
x1
x1
x1